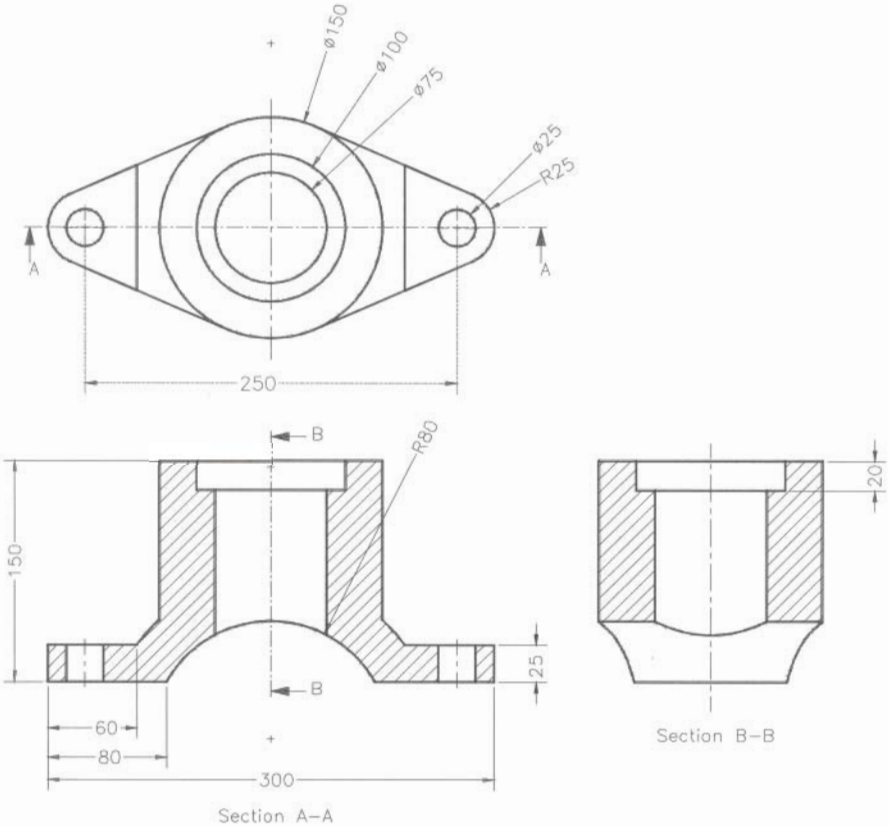
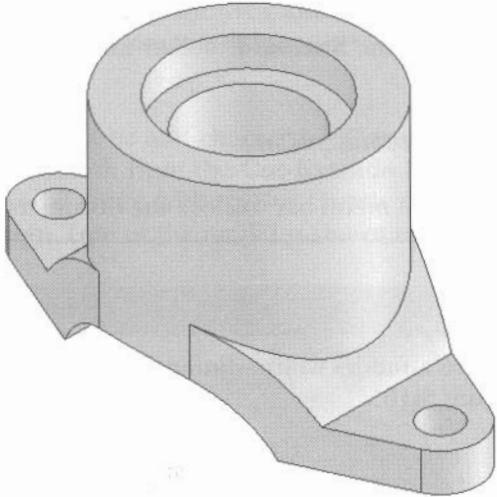
Figure 5-104 *Top view, sectioned front view, and sectioned right view of the model*