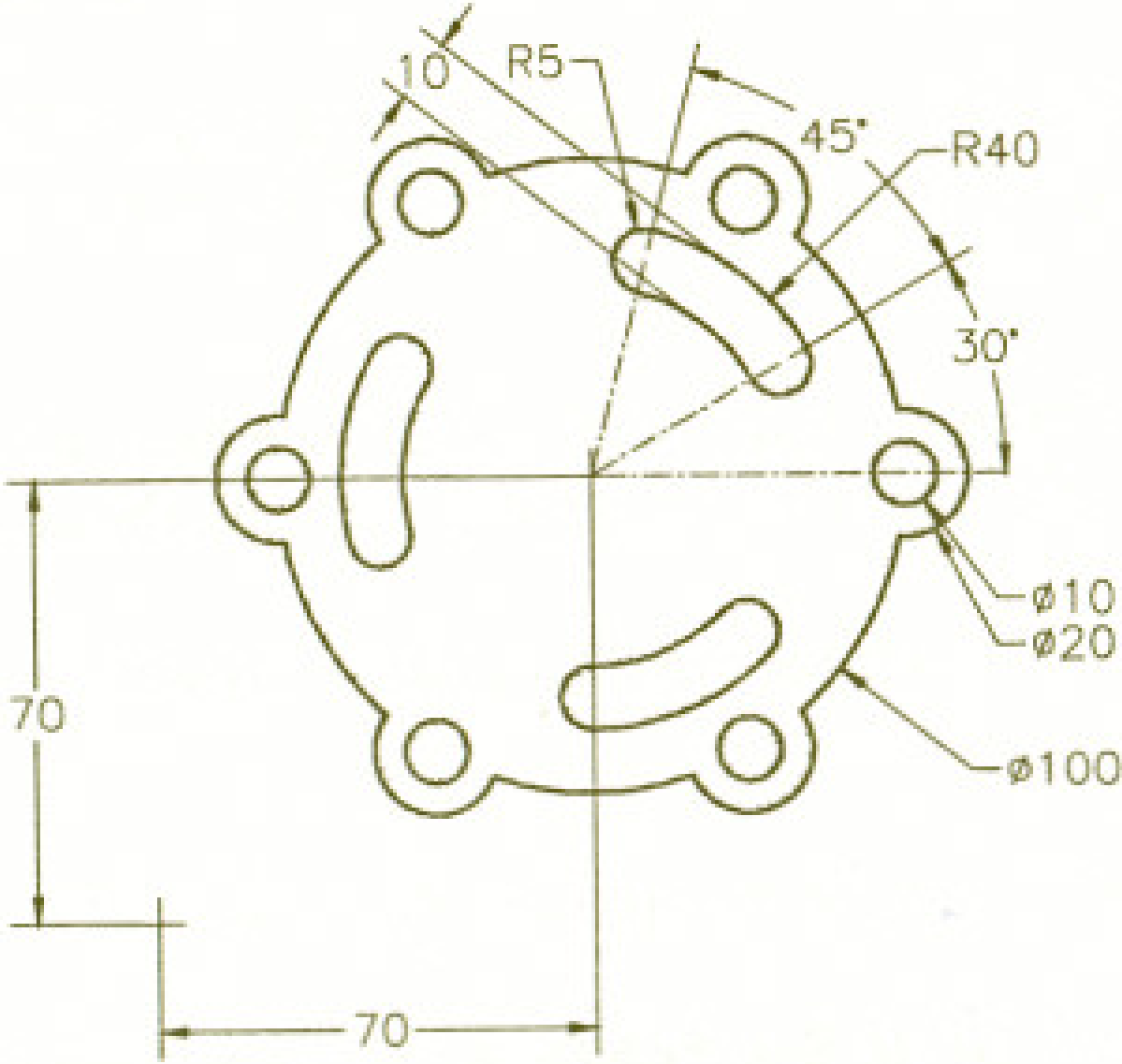

Figure 2-47 The sketch of the base feature