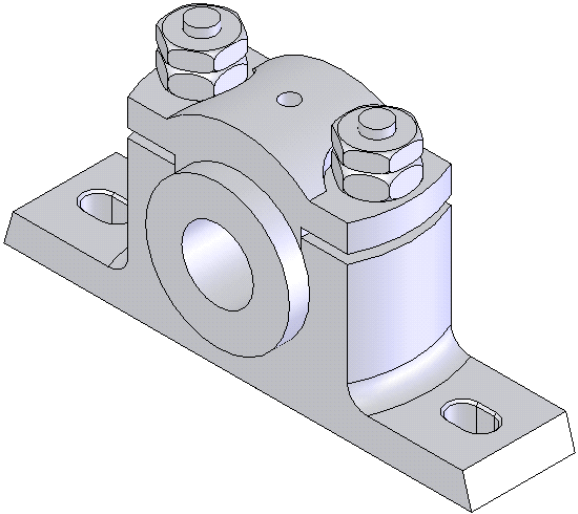

Figure 10-81 *Plummer Block assembly*