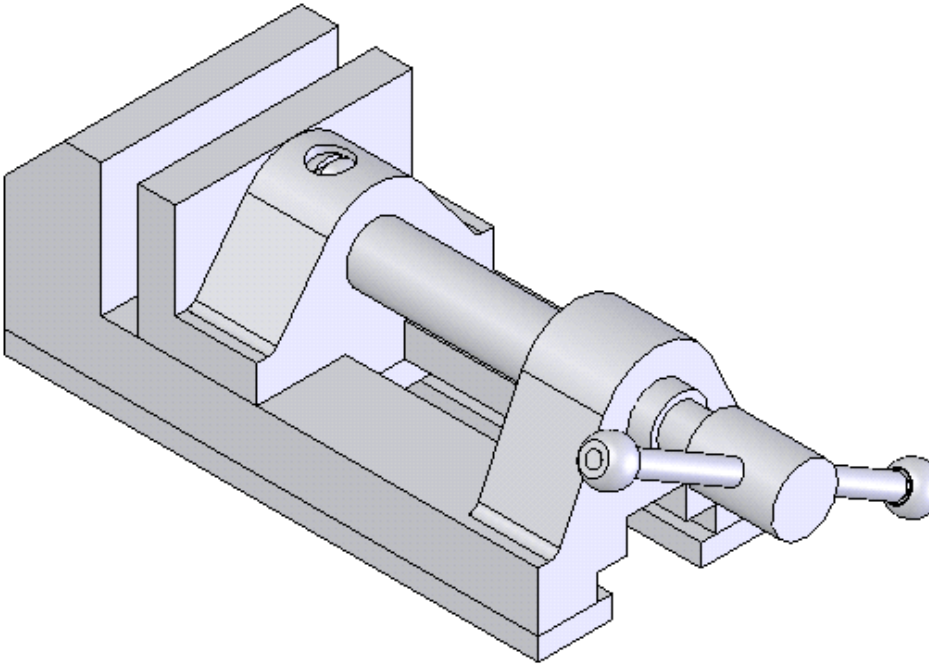
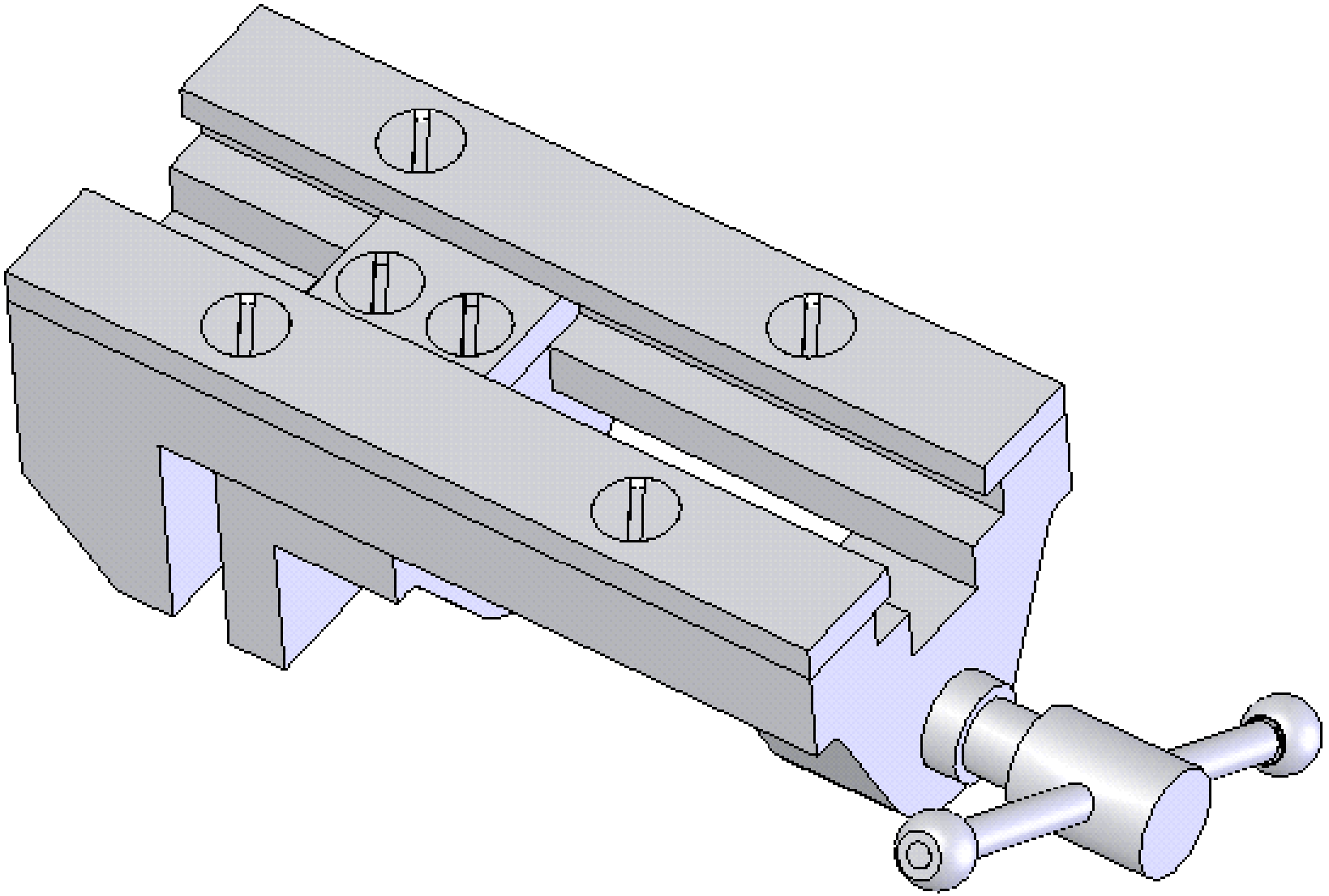
Figure 10-49 *Bench Vice assembly*